Product Name

Wood Brace 67TD13

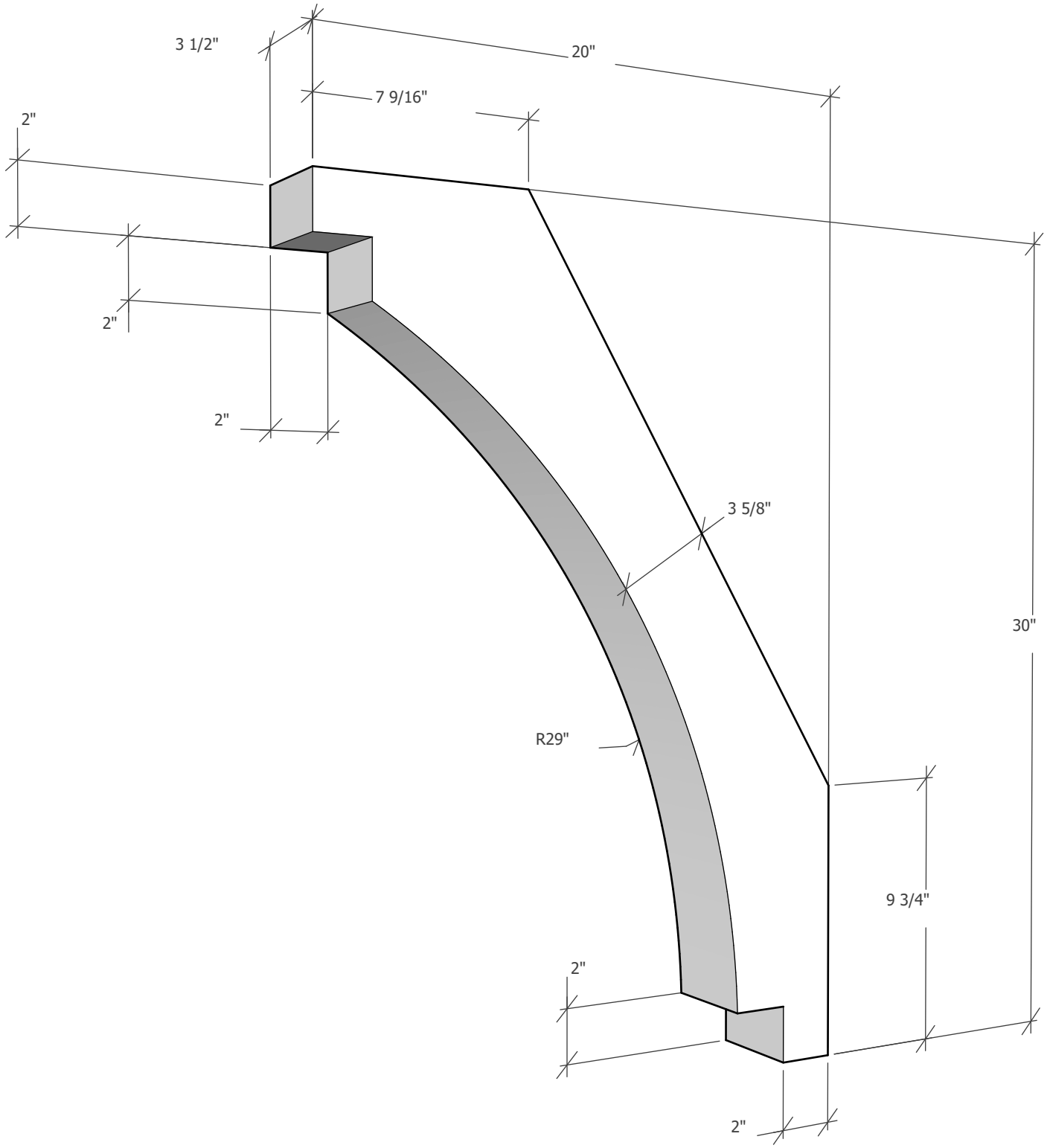

To see product options or learn more about this product, go to timberbuild.com and search for: **Wood Brace 67TD13**

Copyright Statement: All drawings, pictures, and specifications are the property of Timber Build and shall not be reproduced, copied, or used as the basis for manufacture, comparable pricing (bid), or sale of a product without the written permission of Timber Build.

770-406-6646
www.TimberBuild.com
Sales@TimberBuild.com

CAD Drawing Available

August 14, 2024